KIDDE™ COMMERCIAL

ZX832-3B

Addressable Multisensor (Optica/heat)



ZX832-3B

Addressable Multisensor (Optica/heat)

Tekniske specifikationer

General

Addressing method	DIP Switches

Electrical

Power supply type	Loop powered

Detection

Monitoring	Alarm threshold, Continuously self-checking, Fault

Physical

Colour	Black (RAL 9005)
Mounting type	Base mount, Ceiling mount, Recessed mount
Material (body)	Moulded ABS

Environmental

Vandal proof	No
Environment	Indoor

Regulatory

Compliancy	CE, REACH, RoHS 3, WEEE
Certification	CPR

Kompatible produkter

Kategori	Reference	Beskrivelse
Detection device	11510-ZT	ZPL1-1 ADD.LABEL 1001-1127
Detection device	11520	Zpl1-2 Add.Label 2001-2127
Detection device	11530-ZT	ZPL1-3 ADD.LABEL 3001-3127
Detection device	11540-ZT	ZPL1-4 ADD.LABEL 4001-4127
Detection device	84301/BLK	ZP7-SB1 Surface Mount Detector Base (Black)
Notification device	122301	Z-RL3 Remote LED w/ "Fire" Text, Square
Notification device	Z-RL4	Remote LED Indicator - Square

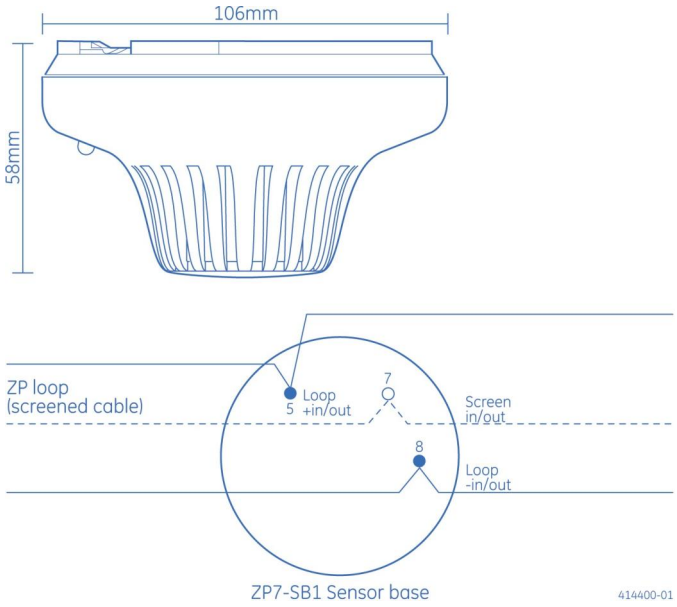

Kidde Global Solutions er et innovativt selskab og forbeholder sig ret til at ændre produktspecifikationer uden varsel. De nyeste produktspecifikationer kan du finde på dk.firesecurityproducts.com eller ved at kontakte din salgsrepræsentant hos.

Last updated on 12 November 2026 - 18:57