DC103

Biased for high security. surf 4 wire

DC101-Series

The DC101-Series surface mount magnetic contacts are designed for use in installations where a small, sealed unit is required. The reed switch is totally encapsulated in an exclusive polyurethane potting compound preventing moisture from entering the switch and causing false alarms.

Easy installation

The 16 mm standard gap distance allows for fast, easy installation and prevents false alarms from loose fitting doors. Recessed mounting holes make for clean-looking installations.

High Quality components and materials

Reed legs are plated with rhodium or ruthenium, and hermetically sealed in dry nitrogen. This offers superior protection against sticking and provides a moisture free environment therefore preventing corrosion.



Details

- Convenient surface mounting
- Standard 2 m wire length
- Tamper loop provided
- Neat and tidy design

DC103

Biased for high security. surf 4 wire

Technical specifications

General

Application type	Surface mount
Contact type	NC
Connectivity	4 wires, 2 m

Wired/wireless

Wired-wireless	Wired
Operating gap	15mm (min.) -31 mm (max.)

Physical

Physical dimensions	51 x 9 x 9 mm
Colour	White

Regulatory

EN50131 grade	Grade 2

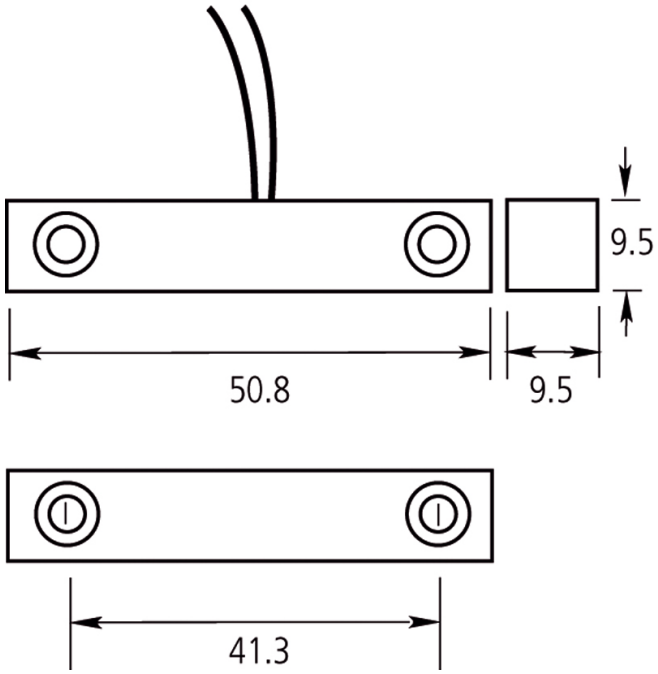

As a company of innovation, Kidde Global Solutions reserves the right to change product specifications without notice. For the latest product specifications, visit firesecurityproducts.com online or contact your sales representative.

Last updated on 18 June 2026 - 14:22