TVP-PMB-02

TruVision PTZ Pole Mount bracket

General

The TruVision TVP-PMB-02 pole mount bracket can be used to install PTZ cameras on a pole.



Details

- Pole mount bracket compatible with PTZ wall mount bracket TVP-WMB-01
- Adjustable diameter from 67 to 127 mm

TVP-PMB-02

TruVision PTZ Pole Mount bracket

Technical specifications

General

Bracket type	Camera
Support type	PTZ camera
Bracket mounting part	Mounting bracket
Mount type	Pole mount
Cable management	Yes

Physical

Physical dimensions	143 x 128 x 194 mm Diameter mounting rings from 67 to 127 mm
Net weight	1300 g
Colour	Grey
Material	Stainless steel

Environmental

Environment	Indoor, Outdoor

Compatible products

Category	Reference	Description
Brackets & Mounts	TVP-WMB-01	TruVision PTZ Wall Mount bracket

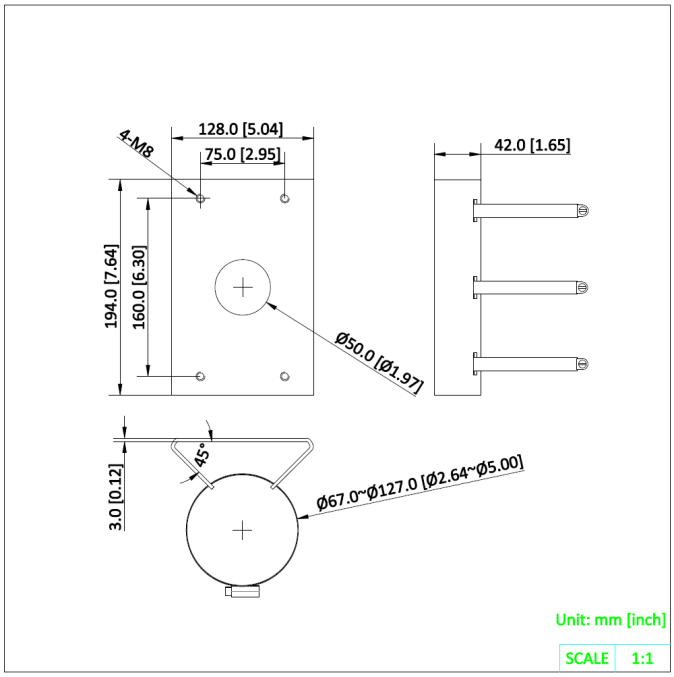

As a company of innovation, Kidde Global Solutions reserves the right to change product specifications without notice. For the latest product specifications, visit firesecurityproducts.com online or contact your sales representative.

Last updated on 24 August 2026 - 15:23