ZP755B-2P

Addressable Base Sounder (Polar White)



ZP755B-2P

Addressable Base Sounder (Polar White)

Spécifications techniques

General

Addressing method	DIP Switches
Monitoring	Device removal, Device type, Open circuit, Short circuit, Sound output

Physical

Colour	Polar white
Mounting type	Surface mount
Material	Moulded thermoplastic

Environmental

Environment	Indoor

Regulatory

Certification	EN54-3

Produits compatibles

Catégorie	Référence	Description
Detection device	ZP720-3P	Addressable heat detector
Detection device	ZP730-2P	ZP7 Series Addressable Optical Detector
Detection device	ZP732-2P	ZP7 Series Addressable Dual Detector (Optical & Heat) , Polar White
Detection device	ZX832-3P	ZP7 Series Addressable Multisensor (Optical/heat)
Notification device	70802	Red Cap for ZP755B Series Notification Devices
Notification device	SPB-2P	PLUG-IN BASE, PW
Notification device	ZP755-COV-P	ZP7 Series Detector Base Cover (Polar White)

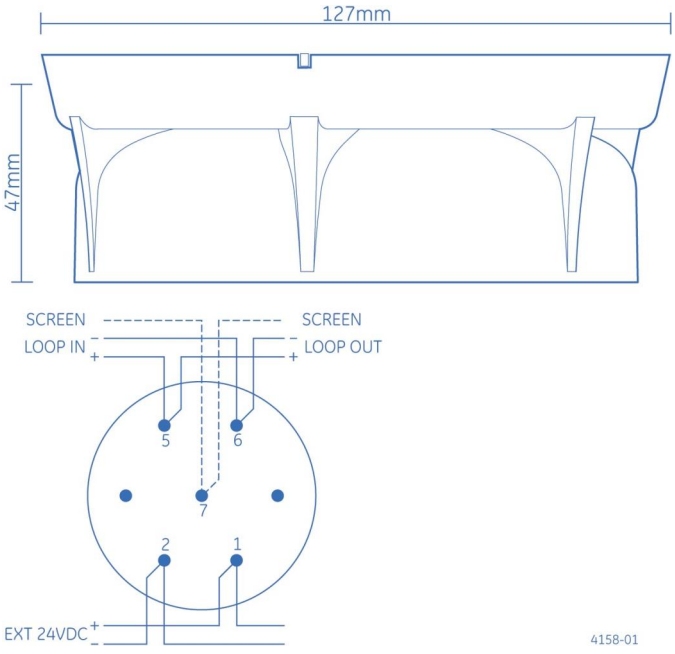

KIDDE COMMERCIAL

En tant que société d'innovation, Kidde Global Solutions se réserve le droit de modifier les spécifications des produits sans préavis. Pour les dernières spécifications du produit, visitez le site web be.firesecurityproducts.com ou contactez votre représentant commercial.

Last updated on 12 November 2026 - 18:57