TVP-WMB-01

TruVision PTZ Wall Mount bracket

Product overview

The TVP-WMB-01 is a wall mount bracket that can be used in combination with various TruVision PTZs. It can be combined with corner or pole mount accessories to facilitate various installation types.

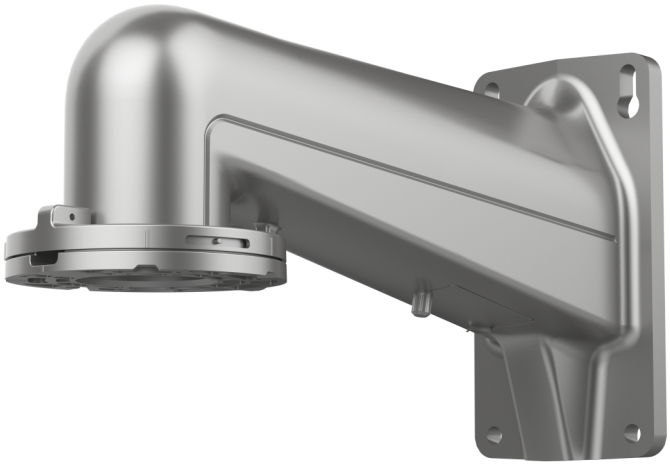

Dettagli

- Wall mount bracket
- Compatible with corner mount and pole mount accessories TVP-PMB-02 and TVP-CMB-02
- Safety lanyard connection for secure PTZ installation
- Cable management within the bracket

TVP-WMB-01

TruVision PTZ Wall Mount bracket

Specifiche tecniche

General

Bracket type	Caméra
Support type	PTZ Kamera
Bracket mounting part	Mounting bracket
Mount type	Vægmontering
Cable management	Yes

Physical

Physical dimensions	180 × 97 × 329 mm
Net weight	1.39 kg
Colour	Grå
Material	Alliage d’aluminium et acier

Prodotti compatibili

Categoria	Riferimento	Descrizione
Brackets & Mounts	TVP-CMB-02	TruVision PTZ Corner Mount bracket
Brackets & Mounts	TVP-WMB-01	TruVision PTZ Wall Mount bracket
Camera	TVGP-P02-0401-PTZ-G	TruVision 4MP IP PTZ camera, H.265+, 300m IR, 25x zoom, Super Low Light, IP67, IK10, NEMA 4X, Hi-PoE/36VDC
Camera	TVGP-P02-0402-PTZ-G	TruVision 4MP IP PTZ camera, H.265+, 400m IR, 42x zoom, Super Low Light, IP67, IK10, NEMA 4X, Hi-PoE/36VDC

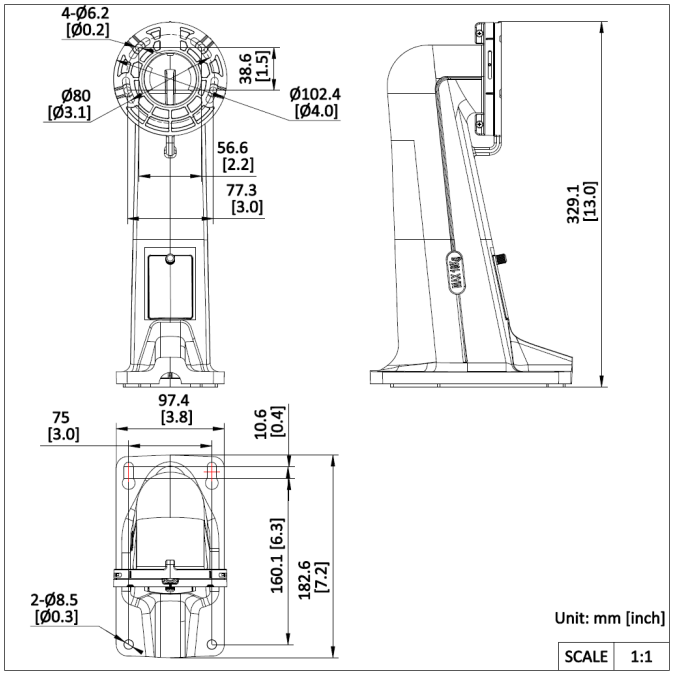

In quanto azienda in continua innovazione, Kidde Global Solutions si riserva il diritto di modificare le specifiche del prodotto senza preavviso. Per avere informazioni sempre aggiornate, visita it.firesecurityproducts.com online o contatta il tuo riferimento commerciale.

Last updated on 12 November 2026 - 18:57