# ZP755B-2P

**Addressable Base Sounder (Polar White)**



# ZP755B-2P

## Addressable Base Sounder (Polar White)

## Technische specificaties

### General

| | |
|---|---|
| Addressing method | DIP Switches |
| Monitoring | Device removal, Device type, Open circuit, Short circuit, Sound output |

### Physical

| | |
|---|---|
| Colour | Polar white |
| Mounting type | Surface mount |
| Material | Moulded thermoplastic |

### Environmental

| | |
|---|---|
| Environment | Indoor |

### Regulatory

| | |
|---|---|
| Certification | EN54-3 |

### Compatibele producten

| Categorie | Referentie | Beschrijving |
|---|---|---|
| Detection device | ZP720-3P | Addressable heat detector |
| Detection device | ZP730-2P | ZP7 Series Addressable Optical Detector |
| Detection device | ZP732-2P | ZP7 Series Addressable Dual Detector (Optical & Heat) , Polar White |
| Detection device | ZX832-3P | ZP7 Series Addressable Multisensor (Optical/heat) |
| Notification device | 70802 | Red Cap for ZP755B Series Notification Devices |
| Notification device | SPB-2P | PLUG-IN BASE, PW |
| Notification device | ZP755-COV-P | ZP7 Series Detector Base Cover (Polar White) |

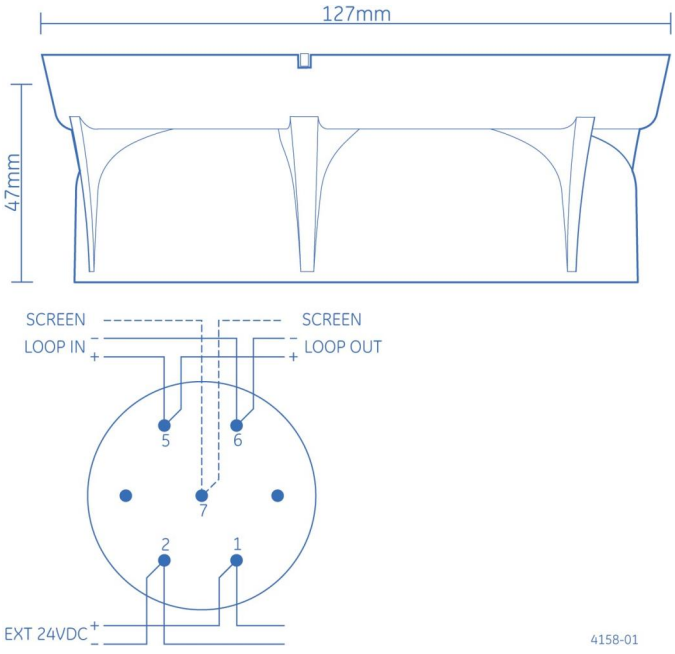


Als een bedrijf van innovatie behoudt Kidde Global Solutions zich het recht voor productspecificaties zonder kennisgeving te wijzigen. Ga voor de nieuwste productspecificaties online naar be.firesecurityproducts.com of neem contact op met uw verkoopvertegenwoordiger.

Last updated on 12 November 2026 - 18:57