ACA-CT-100

T-clips för värmedetektorkabel 100-pack

General

The ACA-CT "T" clip is designed to secure LHD (linear heat detection) sensor cable. I may be used as a ceiling or wall mount clip.

The clip consists of a low density polyethylene resin moulding with a slot into which the heat sensing cable is located, combined with a 25 mm standoff. In ceiling applications the 25 mm standoff exposes the cable faster to any rise in temperature as it lifts the cable out of the layer of colder air that is often trapped against the ceiling.

Installation

The clip is secured with a screw and wall plug using an M8 pan head screw self tapping screw. For extra security a tie wrap may be used to prevent the cable from being pulled from the clip. A figure-8 configuration on the tie wrap is ideal for this.

Spacing for clips is recommended every meter along the length of the cable. Two clips in close proximity are used at 90 degrees bends or where the cable route changes direction.

For space protection applications the ideal location for the heat sensing cable is on the ceiling or the top of the sidewall. This ensures that the cable is rapidly exposed to the plume of hot gases from any event that may arise and spread across the ceiling.



Detaljer

- Easy installation of linear heat cable
- For ceiling or wall mount applications
- Provides insulation and spacing from walls and ceilings
- Standard M4 fixing hole
- Available in quantities of 100

ACA-CT-100

T-clips för värmedetektorkabel 100-pack

Tekniska specifikationer

Physical

Mounting type	Clip on
Material (body)	Low density polyethylene resin

Environmental

Environment	Indoor

Regulatory

Compliancy	RoHS

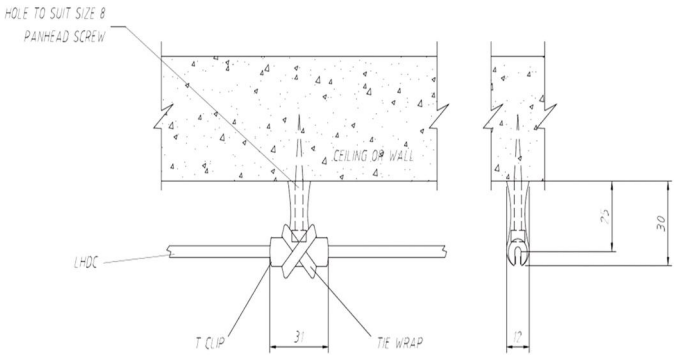

Kidde Global Solutions förbehåller sig rätten att ändra produktspecifikationer utan föregående meddelande. För de senaste produktspecifikationerna, besök se.firesecurityproducts.com online eller kontakta din försäljningsrepresentant.

Last updated on 12 November 2026 - 18:57