ZP755B-2P

Addressable Base Sounder (Polar White)



ZP755B-2P

Addressable Base Sounder (Polar White)

Tekniska specifikationer

General

Addressing method	DIP Switches
Monitoring	Device removal, Device type, Open circuit, Short circuit, Sound output

Physical

Colour	Polar white
Mounting type	Surface mount
Material	Moulded thermoplastic

Environmental

Environment	Indoor

Regulatory

Certification	EN54-3

Kompatibla produkter

Kategori	Referens	Beskrivning
Detection device	ZP720-3P	Addressable heat detector
Detection device	ZP730-2P	ZP7 Series Addressable Optical Detector
Detection device	ZP732-2P	ZP7 Series Addressable Dual Detector (Optical & Heat) , Polar White
Detection device	ZX832-3P	ZP7 Series Addressable Multisensor (Optical/heat)
Notification device	70802	Red Cap for ZP755B Series Notification Devices
Notification device	SPB-2P	PLUG-IN BASE, PW
Notification device	ZP755-COV-P	ZP7 Series Detector Base Cover (Polar White)

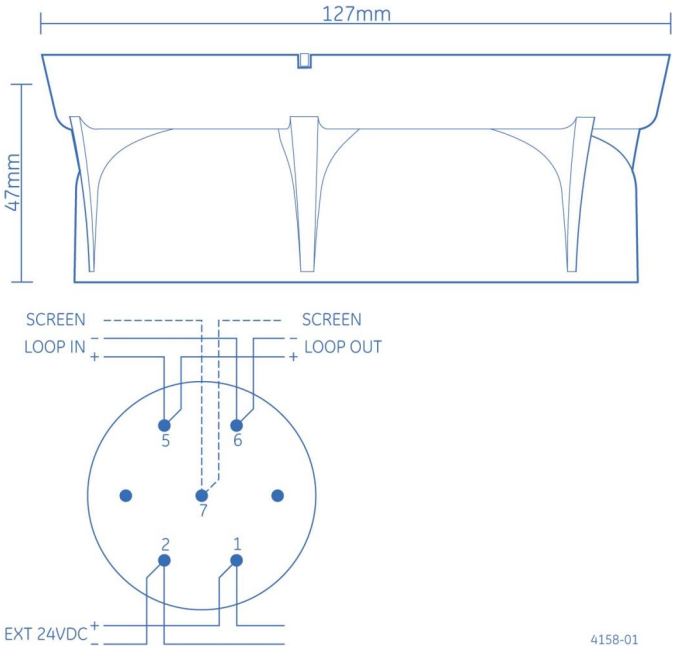

Kidde Global Solutions förbehåller sig rätten att ändra produktspecifikationer utan föregående meddelande. För de senaste produktspecifikationerna, besök se.firesecurityproducts.com online eller kontakta din försäljningsrepresentant.

Last updated on 12 November 2026 - 18:57