NC-BA-SM-W

Accessori base convenzionale - Controbase di montaggio (Bianco)

General

The NC-BA-SM-W is an NC-Series surface mount base accessory. It allows cabling to be installed by running standard electrical conduit directly into the base, leaving no exposed cabling.

Preparation

The standard rear cable entry into the base is available with the same wide opening dimensions to the standard base with ample room for cables. In addition, four entry points are provided on the wall of the fixture to accommodate side entry, spaced at 90° around the base to allow entry and exit in all directions.

Installation

The conduit entry points are conveniently supplied with breakouts. Keyhole screw fixing locations adds to the ease of installation.

The standard NC-Series detector base fits snugly on top of the fixture, completing the installation with the same feature set as for standard surface mount installation for quick, easy and secure detector placement.



Dettagli

- Large rear cable entry with ample space for cables
- Side conduit entry protects cables from damage
- Breakout support for conduit entry
- Installation fixture with first fix screw option reduces installation time and effort
- Allows surface cabling for all NC-Series conventional detector bases

NC-BA-SM-W

Accessori base convenzionale - Controbase di montaggio (Bianco)

Specifiche tecniche

Physical

Colour	Weiß (RAL 9016)
Mounting type	Deckenmontage

Environmental

Vandal proof	No
Environment	Drinnen

Regulatory

Compliancy	CE, REACH, RoHS 2, WEEE

Prodotti compatibili

Categoria	Riferimento	Descrizione
Detection device	NC-DB-B	Base per rivelatore convenzionale serie NC (nera)
Detection device	NC-DB-W	Base per rivelatore convenzionale serie NC (bianca)
Detection device	NC-DB2R-W	Base per rivelatore convenzionale serie NC con due relè (bianca)
Detection device	NC-DBD-W	Base per rivelatore convenzionale serie NC con diodo (bianca)
Detection device	NC-DBR-W	Base per rivelatore convenzionale serie NC con relè (bianca)

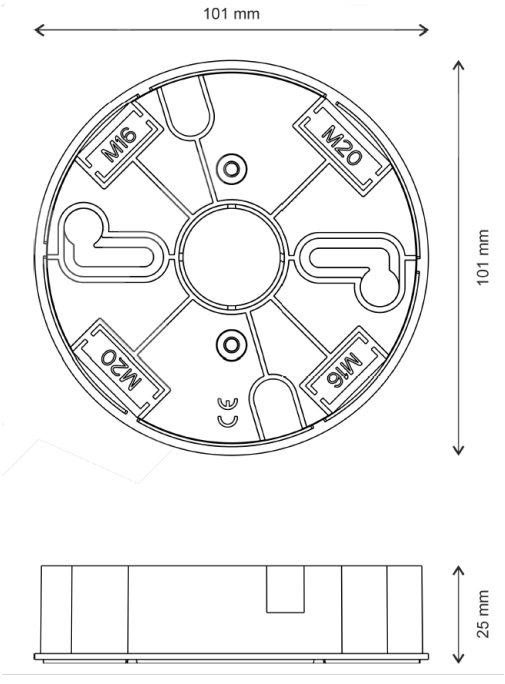

KIDDE COMMERCIAL

In quanto azienda in continua innovazione, Kidde Global Solutions si riserva il diritto di modificare le specifiche del prodotto senza preavviso. Per avere informazioni sempre aggiornate, visita it.firesecurityproducts.com online o contatta il tuo riferimento commerciale.

Last updated on 12 November 2026 - 18:57