TVGP-P01-0802-DOM-G

Kamera kopułowa IP TruVision™ 8MP, Extreme Low Light, obiektyw 8-32 mm, szara

Overview

The TruVision P Series IP dome cameras have a rich set of features which make them ideal for demanding security, surveillance, and monitoring applications such as commercial, retail and large projects. With smart event capabilities available in 4 and 8MP 4K resolutions delivering high-quality images thanks to their extreme low light sensitivity brings clear visibility even in the dark and enhanced image processing.

The cameras support up to 4 configurable video streams which allow users to optimize the cameras remote live view capabilities while controlling the bandwidth usage. The motorized varifocal lens with P-iris technology allows users to remotely adjust the zoom level and focus to get crisp images anytime anywhere. In addition to the compatibility with other TruVision products and 3rd party VMS software, the cameras also support NAS recording or local MicroSD card recording to protect data in the event of network disruptions.

The cameras go above and beyond standard motion detection with enhanced alarm capabilities, including cross line detection, intrusion detection, region entrance, region exit and face capture features. With its smart person/vehicle filter feature the camera can ignore irrelevant motion or VCA events which will automatically lead to less storage consumption and faster retrieval of relevant video events.



Szczegóły

- Maksymalna rozdzielczość: 3840 × 2160
- Kompresja H.265(+), H.264(+) i MJPEG
- 4 niezależne, konfigurowalne strumienie wideo
- Obiektyw moto-zoom 8 - 32 mm z autofokusem
- Oświetlenie IR do 50 m
- Obiektyw P-iris
- ONVIF Profile S, G i T
- Rozbudowana analityka wideo (VCA)
- Szeroki zakres dynamiki do 120 dB
- Nagrywanie brzegowe do 256 GB z opcjonalną kartą SD

TVGP-P01-0802-DOM-G

Kamera kopułowa IP TruVision™ 8MP, Extreme Low Light, obiektyw 8-32 mm, szara

Specyfikacja techniczna

General

Technology	IP
Video standard	NTSC, PAL
Image settings	De-Fog, Vue du couloir, Miroir, Région d'intérêt (ROI)
Privacy masking	Yes
Software compatibility	Milestone XProtect, OnGuard, TruVision Navigator, TVRmobile, Logiciel de navigation

Camera

Sensor size	1 / 1.8 "
Max. resolution	8 MPX
Sensor scan	Progressif
Sensor type	CMOS
Shutter time	1/3 s to 1/100,000 s

Lighting performance

WDR type	Vrai WDR
WDR	120 dB
Digital noise reduction	3D DNR
Day/night	Vrai jour / nuit
Motorized IR cut filter	Yes
Color sensitivity	Color: 0.004 Lux @ (F1.4, AGC ON),B/W: 0 Lux with IR
Infrared (IR)	Yes
IR range	Up to 50 m
IR wavelength	850 nm

Encoding

Video streams	4
Main stream compression	H.264, H.264+, H.265, H.265+
Sub stream compression	H.264, H.265, M-JPEG
Third stream compression	H.264, H.265
Video bit rate	32 to 16 Mbps
Main stream resolutions	1280 x 720 (XVGA), 1920 x 1080 (1080p), 2688 x 1520, 3200 x 1800, 3840 x 2160
Sub stream resolutions	1280 x 720 (XVGA), 640 x 360 (nHD), 640 x 480 (VGA)
Third stream resolutions	1280 x 720 (XVGA), 1920 x 1080 (1080p), 640 x 360 (nHD), 640 x 480 (VGA)

Lens

Lens type	Varifocale motorisée
Focal length	8 to 32 mm: horizontal FoV 41.8 to 15°, vertical FoV 22.9 to 8.5°, diagonal FoV 48.7 to 17.1°
Auto focus	Yes
Motorized zoom	Yes

DORI

Detection	218 to 580 m
Observation	86.5 to 230.2 m
Recognition	43.6 to116 m
Identification	21.8 to 58 m

Network

Network interface	RJ-45 10/100 Mbit/s auto-adaptable interface Ethernet
Integration	CGI, ISAPI, ONVIF profil G, ONVIF profil S, ONVIF Profile T
Supported network protocols	802.1x, Bonjour, DDNS, DHCP, DNS, FTP, HTTP, HTTPS, ICMP, IGMP, IPv4, IPv6, NTP, PPPoE, Qos, RTCP, RTP, RTSP, SMTP, SNMP, TCP/IP, UPnP

Audio

Audio compression	G.711alaw, G.711ulaw, G.722.1, G.726, MP2L2, MP3, PCM
Audio in	1 input (line in), terminal block, max. input amplitude: 3.3 Vpp, input impedance: 4.7 KΩ,
Audio out	1 output (line out), terminal block, max. output amplitude: 3.3 Vpp, output impedance: 100 Ω

Alarm I/O

Alarm inputs	2
Alarm outputs	2 outputs (24 VAC/VDC, 1A max)

Storage

Local storage support	Yes
Local storage type	Built-in Micro SD/SDHC/SDXC card slot
Max. SD card capacity	256 GB

Video intelligence

Alarm trigger	HDD error, HDD full, Invalid login, IP address conflict, Network disconnected, Sabotage
ROI	5 fixed regions for main stream and sub-stream
Smart event	Détection de mouvement avancée, Audio exception detection, Mise au point, Face capture, Détection d'intrusion, Détection de passage à niveau, Détection de suppression d'objet, People counting, People management, Détection d'entrée région, Détection de région de sortie, Changement de scène, Unattended baggage detection

Electrical

Operating voltage	12 VDC ± 25%, 0.9 A, 24 VAC ± 20%, 0.75 A, two-core terminal block, PoE: 802.3af, Class 3, 36 V to 57 V, 0.36 A to 0.23 A
Power consumption	12 VDC, 0.9 A, max. 10.8 W, 24 VAC, 0.75 A, max. 10.8 W, PoE: 802.3at, max. 12.9 W

Physical

Physical dimensions	Ø162 × 141.8 mm Ø6.4 × 5.6 in.
Net weight	1420 g 3.1 lb.
Shipping weight	2058 g 4.5 lb.
Colour	Grey
Form Factor	Dome

TVGP-P01-0802-DOM-G

Kamera kopułowa IP TruVision™ 8MP, Extreme Low Light, obiektyw 8-32 mm, szara

Environmental

Vandal proof	Yes
Impact rating	IK10
Environment	Outdoor
Operating temperature	-40 to +60°C -40 to +140°F
Relative humidity	<95% noncondensing
IP rating	IP67

Regulatory

Compliancy	CE, FCC, REACH, RoHS, UL, WEEE

Wyroby zgodne

Kategoria	Odniesienie	Opis
Brackets & Mounts	TVD-CB9	Pierścień montażowy TruVision do zewnętrznych kamer kopułowych serii 7
Brackets & Mounts	TVD-CBW	Uchwyt ścienny TruVision kompatybilny z pierścieniem montażowym TVD-CB2, TVD-CB3, TVD-CB5A, TVD-CB6, TVD-CB7
Brackets & Mounts	TVD-M-PMA-SS	Adapter do montażu na słupie dla kamer TVB serii 4/5/6 (stal nierdzewna)
Brackets & Mounts	TVD-PPB	Uchwyt sufitowy (wys. 54 cm) do kamer kopułowych TruVision, wymaga dodatkowo TVD-CB5, TVD-CB3 lub TVD-CB2
Brackets & Mounts	TVD-SNB-BB	Puszka montażowa do uchwytu TruVision TVD-SNB

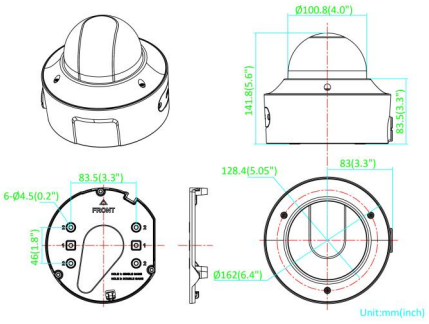

Będąc firmą innowacyjną, Kidde Global Solutions zastrzega sobie prawo do zmian w specyfikacji wyrobów bez uprzedzenia. W celu uzyskania najnowszych specyfikacji prosimy o wizytę na stronach pl/firesecurityproducts.com lub kontakt z przedstawicielem handlowym.

Last updated on 12 November 2026 - 18:57