KIDDE™ COMMERCIAL

ZP720-3P

Addressable heat detector



ZP720-3P
Addressable heat detector

Tekniska specifikationer

General

Addressing method	Dip-Schalter

Electrical

Power supply type	Loop-Stromversorgung

Detection

Monitoring	Alarm threshold, Continuously self-checking

Physical

Colour	Polarweiß
Mounting type	Montage auf Sockel, Versenkte Montage, Wandmontage
Material (body)	Geformtes ABS

Environmental

Vandal proof	No
Environment	Drinnen

Regulatory

Compliancy	CE, REACH, RoHS 3, WEEE
Certification	CPR

Kompatibla produkter

Kategori	Referens	Beskrivning
Detection device	11510-ZT	ZPL1-1 ADD.LABEL 1001-1127
Detection device	11520	Zpl1-2 Add.Label 2001-2127
Detection device	11530-ZT	ZPL1-3 ADD.LABEL 3001-3127
Detection device	11540-ZT	ZPL1-4 ADD.LABEL 4001-4127
Detection device	ZP7-IB2-P	Ziton series point detector base with isolator
Detection device	ZP7-RB1-P	Recess Mount Detector Base (Polar White)
Detection device	ZP7-SB1-P	Surface Mount Detector Base (Polar White)
Notification device	122301	Z-RL3 Remote LED w/ "Fire" Text, Square
Notification device	Z-RL4	Remote LED Indicator - Square

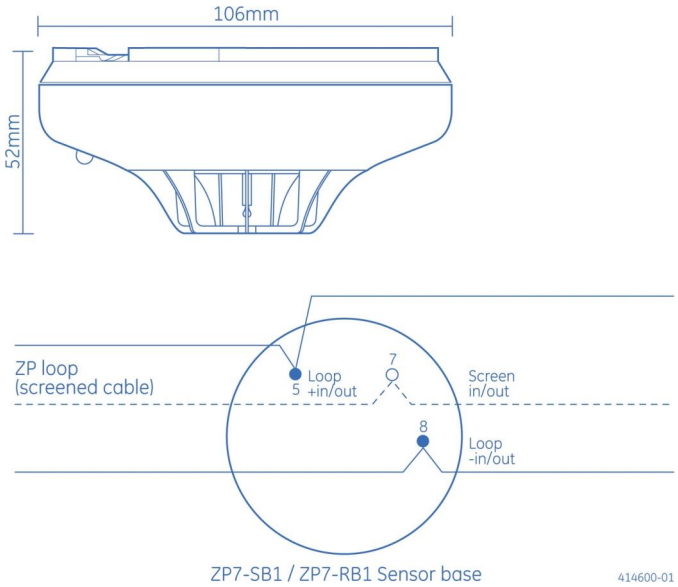

Kidde Global Solutions förbehåller sig rätten att ändra produktspecifikationer utan föregående meddelande. För de senaste produktspecifikationerna, besök se.firesecurityproducts.com online eller kontakta din försäljningsrepresentant.

Last updated on 12 November 2026 - 18:57