1-B6782-189

EExe GRP Junction Box for Tank Top

General

The 1-B6782-189 is a GRP junction box specifically targeted for installation on floating roof storage tank, tank tops. It is supplied with one M20 and one M25 cable glands, and allows for electrical connection between the site cabling and the retractable cable.

Application (LHD)

One significant application for linear heat sensor cable is floating roof storage tanks. As installation in this application provides significant challenges, the 1-B6782-189 junction box helps to simplify the installation.

On a floating roof tank the roof itself is designed to move up and down as the tank is filled or emptied, preventing any vapour space in the tank. The difficulty is maintaining an electrical connection between the top of the tank and the moving tank roof.

In this type of application the 1-B6782-189 junction box is installed at a fixed point at the top of the floating roof tank and enables a connection to be made between the site wiring from the monitoring unit and a retractable cable which terminates on the tank roof.

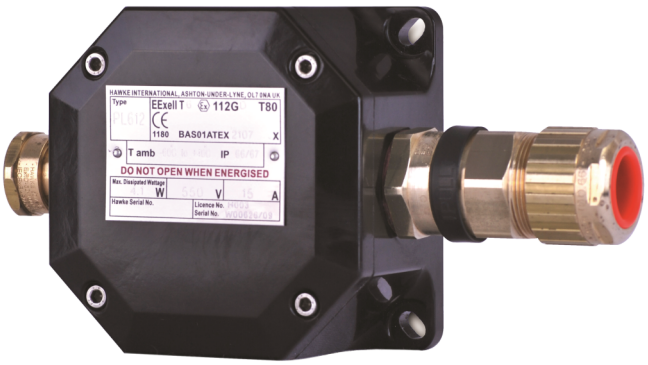

Details

- Increased safety Exe Dual Certified
- Flame retardant to IEC 92.1 Clause 2.38
- High ingress protection rating
- Suitable for use in Zone 1, 2, 21 and 22 applications
- Supports M20 and M25 cable glands
- Supplied with: - 2 x Exd IP66 rated brass cable gland (M20/M25) - 2 x Fibre washers - 2 x Lock nuts (M20/M25) - 6 x Exd cable connectors - 1 x Exd earth connector - Steel continuity plate

1-B6782-189

EExe GRP Junction Box for Tank Top

Technical specifications

Electrical

Terminals	6 x 2.5 mm

Physical

Physical dimensions	120 x 120 x 74 mm (W x H x D)
Net weight	800 g
Colour	Sort
Cable entries	2 (1 x M20, 1 x M25)
Material (body)	Poliestere rinforzato con vetro

Environmental

Operating temperature	-60 to +75°C
Environment	Exd, Indendør, Udendørs
IP rating	IP66/IP67 to IEC/EN 60529
Deluge protection	DTS01
Temperature class / ambient	T6 40°C

Regulatory

Standards	Baseefa06ATEX0117X

Mechanical

Fixing holes	4 x 7 mm @ 102 mm² CRS
Cable size (inner/outer sheath dia)	1 x 8.4 to 14.3mm / 12.5 to 20.5mm 1 x 10 to 14.3mm (outer)

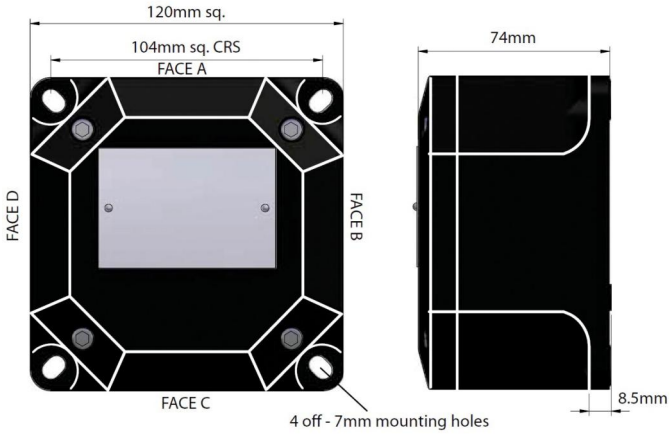

As a company of innovation, Kidde Global Solutions reserves the right to change product specifications without notice. For the latest product specifications, visit firesecurityproducts.com online or contact your sales representative.

Last updated on 7 September 2023 - 12:59