ZP720-3P

Ziton series addressable heat detector

Product overview

The ZP720-3P addressable thermal detector is a Polar White, thermistor controlled device that responds to changes in its ambient temperature. The device provides a reliable response to fires in areas where environmental conditions may prohibit the use of smoke detectors.

The sensitivity of each detector is set by the ZP control panel and can be adjusted between four levels ranging between 58 to 75°C - either manually or automatically on a timed basis. At sensitivity level two, the ZP720-3 fully meets the requirements of EN54 Pt 5 (grade 1) and is approved by several international approval bodies. Temperature levels are continuously sensed by the unit and transmitted via the ZP wiring loop as electronic signals, which are assessed and verified by the control panel prior to any alarm decision being taken.

Automatic self test

Detector sensitivity, calibration and self test are carried out automatically by the ZP system. Removal or replacement of an incorrect sensing device will be identified by the system and shown as a fault.

Up to 127 sensing devices may be connected to each of the control panel loops. All loop devices incorporate switch settings enabling them to be given a unique address, which is polled by the panel every two seconds.

Locking base option

The low profile moulding together with either surface or recessed bases makes the unit ideal for both commercial and industrial interiors. A red LED indicator situated on the sensor moulding, flashes to indicate when the unit is in alarm.

For ease of removal, detectors plug into a range of base units by a simple twist and lock action. A site selectable option is provided to lock the detector into its base. Once applied, the unit can only be removed by means of a special tool.

Space for address labels is provided on detector and base mouldings ensuring that units are replaced in their correct location and that address numbers can be identified from floor level.



Details

- Analogue sensing - reduces false and unwanted alarms
- Addressable - system knows the status and location of every sensor
- Automatic self test
- EN54 Part 5 approved and CPD certified

ZP720-3P

Ziton series addressable heat detector

Technical specifications

General

Status indication	Alarm LED (red)
Compatibility	All ZP7 addressable systems
Alarm levels	Configurable
Connectivity	2-wire loop or spur
Addressing method	DIP Switches

Electrical

Power supply type	Alimentato ad anello
Operating voltage	Loop 19.5 to 20.5 V, line loss < 4 V
Current consumption	600 µA (quiescent) 700 µA (alarm)
No. of cable cores	2

Detection

Detection principle	Thermistor
Monitoring	Alarm threshold, Continuously self-checking
Coverage area	50 m² (subject to local codes)

Output

Output quantity	1
Output type and rating	Remote indicator
Programmable	No

Physical

Physical dimensions	106 x 52 mm (Ø x H)
Net weight	85 g (excluding base)
Colour	Bianco polare
Mounting type	Montaggio su base, Forsænket montering, Vægmontering
Material (body)	Støbt ABS

Environmental

Vandal proof	No
Operating temperature	-10 to +85°C
Storage temperature	-20 to +70°C
Relative humidity	20 to 95% noncondensing
Environment	Indendør
IP rating	IP32

Regulatory

Compliancy	CE, REACH, RoHS 3, WEEE
Certification	CPR
Standards	EN54-5

Compatible products

Category	Reference	Description
Detection device	11510-ZT	ZPL1-1 address label 1001-1127
Detection device	11520	ZPL1-2 Add.Label 2001-2127
Detection device	11530-ZT	ZPL1-3 address label 3001-3127
Detection device	11540-ZT	ZPL1-4 address label 4001-4127
Detection device	ZP7-IB2-P	Ziton series point detector base with isolator
Detection device	ZP7-RB1-P	ZP7 Series point detector recess mount base
Detection device	ZP7-SB1-P	ZP7 Series point detector base
Notification device	122301	Z-RL3 Remote LED w/ "Fire" Text, Square
Notification device	Z-RL4	Remote LED Indicator - Square

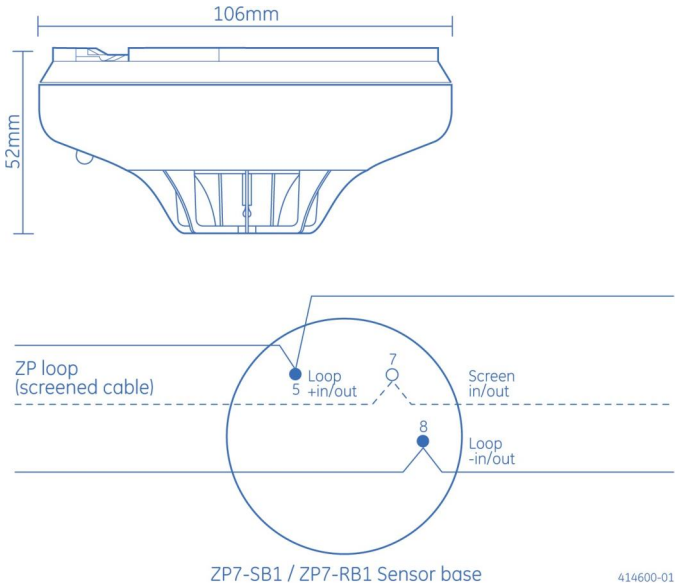

KIDDE COMMERCIAL

As a company of innovation, Kidde Global Solutions reserves the right to change product specifications without notice. For the latest product specifications, visit firesecurityproducts.com online or contact your sales representative.

Last updated on 16 October 2026 - 11:23